NOBUS

Heat & Energy recovery units

SELECTION GUIDE

1. Choose the proper installation types based on the building structure
2. Determine the fresh airflow required according to the use, size and number of persons
3. Select the right specifications and quantity according to the determined fresh airflow

Airflow required in residential buildings

Rooms type	Non-smoking					Slight smoking		Heavy Smoking
	Ordinary ward	Gym	Theater & mall	Office	Computer room	Dining room	VIP room	Meeting room
Personal fresh air consumption(m^3/h) (Q)	17-42	8-20	8.5-21	25-62	40-100	20-50	30-75	50-125
Air changes per hour (P)	1.06-2.65	0.50-1.25	1.06-2.66	1.56-3.90	2.50-6.25	1.25-3.13	1.88-4.69	3.13-7.81

Example

The area of a computer room is 60 sq. meters (S=60), the net height is 3 meters (H=3), and there are 10 persons (N=10) in it.

If it is calculated according to “Personal fresh air consumption”, and assume that: Q=70, the result is Q1 =N*Q=10*70=700(m^3/h)

If it is calculated according to “Air changes per hour”, and assume that: P=5, the result is Q2 =P*S*H=5*60*3=900(m^3)

Since Q2 > Q1 , Q2 is better for selecting the unit.
As to special industry such as hospitals (surgery and the special nursing rooms), labs, workshops, airflow required should be determined in conformity with regulations concerned.

Model description

NBB□-□□T□A

- A — Intelligent control
- T — Series identity
- □ — Multi-speed (if blank, it refers to single speed)
- □□ — Nominal airflow divided by 100
- □ — Installation type (D - suspended type)
- B — Total heat recovery,
- B — Plate heat exchanger
- NB — Nobus energy recovery ventilator

MEDIUM AIRFLOW SERIES

NBBQ-D15TGA~D30TGA

Features

- Energy recovery
- Double skin panel with PU insulation of 20mm
- Quiet operation
- Improved design with higher external static pressure
- Innovative access space design
- Double filters
- Touch screen controller included

Specifications

Model	Airflow m³/h			External pressure (Pa)			Enthalpy Efficiency Summer			Enthalpy Efficiency Winter			Temp. Eff.(%)			Noise dB(A)			Volt. (V)	Current(A)			Input power (W)			N. W. (Kg)
	L	M	H	L	M	H	L	M	H	L	M	H	L	M	H	L	M	H		L	M	H	L	M	H	
NBBQ-D15TGA	1000	1500	1500	84	135	163	69	66	66	74	70	70	74	71	71	46	49	51	220	2.3	3.6	3.8	485	740	785	110
NBBQ-D20TGA	1200	2000	2000	110	132	176	65	62	62	73	71	71	74	71	71	49	51	53		3.0	4.6	4.8	650	980	1020	112
NBBQ-D25TGA	2000	2500	2500	140	170	200	64	61	61	72	70	70	73	70	70	50	52	55		4.5	6.0	6.3	940	1250	1300	130
NBBQ-D30TGA	2500	3000	3000	150	180	210	63	60	60	71	69	69	73	70	70	51	54	57		6.5	8.7	9.0	1400	1870	1950	142

Dimensions

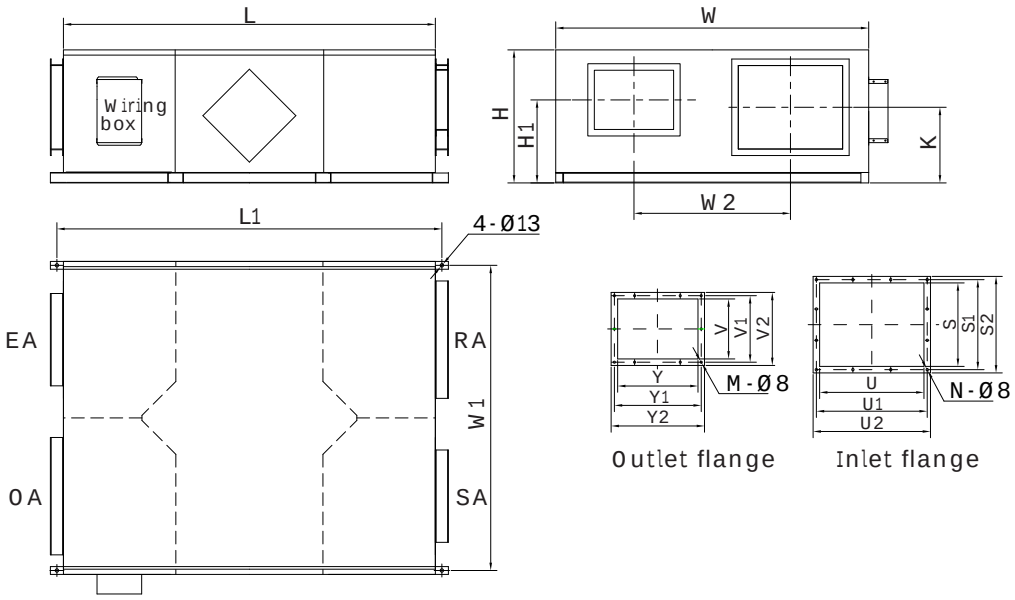

Model	L	W	L1	W1	H	W2	H1	K	V	V1	V2	Y	Y1	Y2	S	S1	S2	U	U1	U2	M	N
NBBQ-D15TGA	1250	1200	1300	1170	520	600	338.5	300	230	255	280	308	333	358	320	345	370	400	425	450	10	12
NBBQ-D20TGA	1250	1200	1300	1170	520	600	338.5	300	230	255	280	308	333	358	320	345	370	400	425	450	10	12
NBBQ-D25TGA	1524	1400	1574	1370	580	700	334	335	273	298	323	350	375	400	350	375	400	500	525	550	10	12
NBBQ-D30TGA	1624	1500	1674	1470	650	750	400	405	285	310	335	373	398	423	350	375	400	500	525	550	10	12

TF SERIES SUSPENDED TYPE

NBBQ-D1.5TFB~D10TFB

Features

- Energy recovery
- Airflow from 100-1000m3/h
- Quiet operation
- Easy installation to ceiling
- By-pass function
- Double filters
- Touch screen controller included

Specifications

Model	Airflow(m^3/h)			External pressure (Pa)			Enthalpy Efficiency (%)						Temp. Eff.(%)			Noise dB(A)			Volt. (V)	Current (A)	Input power (W)	N. W. (Kg)
							Summer			Winter												
	L	M	H	L	M	H	L	M	H	L	M	H	L	M	H	L	M	H				
NBBQ-D1.5TFB	100	150	150	110	118	120	65	60	60	70	63	63	80	75	75	25	30	31.5	220	0.5	105	23
NBBQ-D2.5TFB	200	250	250	90	105	110	71	62	62	73	65	65	81	73	73	27	34	34.5	220	0.56	117	25
NBBQ-D3.5TFB	300	350	350	110	118	120	70	62	62	73	65	65	82	74	74	31	37	37.5	220	0.72	150	31
NBBQ-D5TFB	400	500	500	110	130	140	72	63	63	75	67	67	81	76	76	29	35	39	220	0.96	200	36
NBBQ-D6.5TFB	550	650	650	120	150	160	67	60	60	71	65	65	82	74	74	37	40	43	220	1.7	355	60
NBBQ-D8TFB	680	800	800	120	125	170	71	63	63	73	65	65	80	74	74	37	40	43	220	2.8	585	60
NBBQ-D10TFB	840	1000	1000	105	120	175	68	60	60	72	62	62	80	76	76	36	42	44	220	3.3	690	79

Dimensions

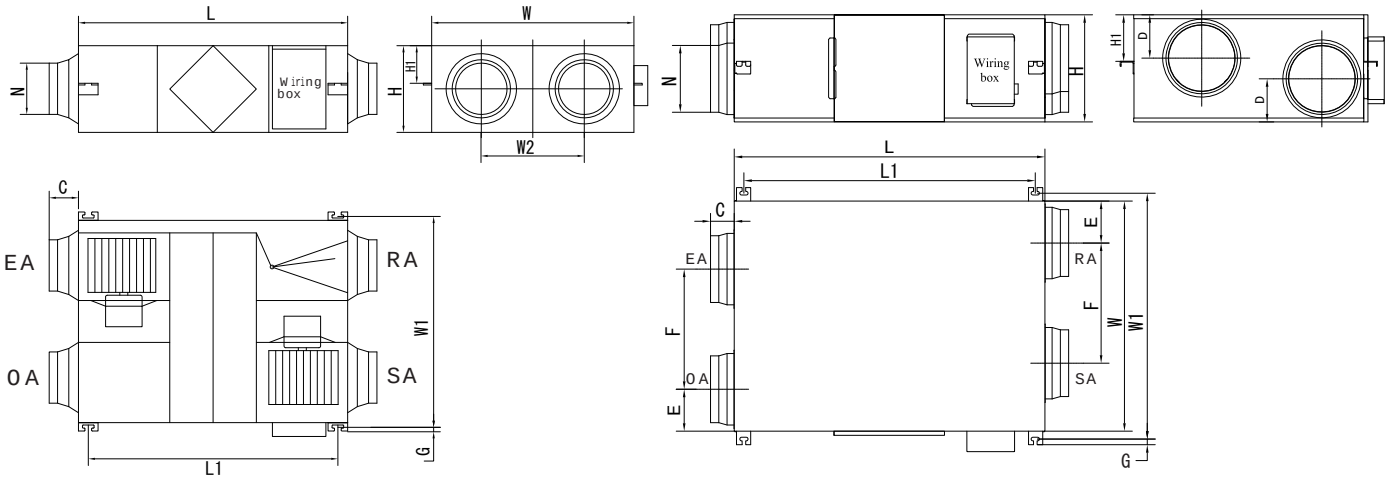

NBBQ-D1.5TFB~D6.5TFB

NBBQ-D8TFB~D10TFB

Model	L	L1	W	W1	W2	H	H1	C	G	N
NBBQ-D1.5TFB	666	725	580	510	290	264	20	100	19	ϕ144
NBBQ-D2.5TFB	744	675	599	657	315	270	111	100	19	ϕ144
NBBQ-D3.5TFB	744	675	804	860	480	270	111	100	19	ϕ144
NBBQ-D5TFB	824	754	904	960	500	270	111	107	19	ϕ194
NBBQ-D6.5TFB	1116	1045	884	940	428	388	170	85	19	ϕ242

Model	L	L1	W	W1	H	H1	N	C	D	E	F	G
NBBQ-D8TFB	1126	1056	834	891	388	169	ϕ242	86	157	152	436	21
NBBQ-D10TFB	1129	1060	1216	1273	388	171	ϕ242	86	147	152	621	21